REV.	DATE	ECN NO.	MODIFICATION	APPROVER
A	2012/03/09	/	NEW	Vicky

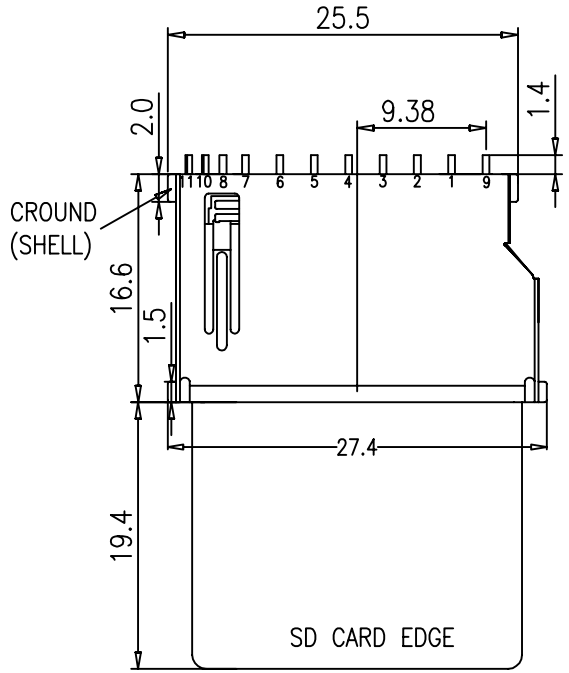

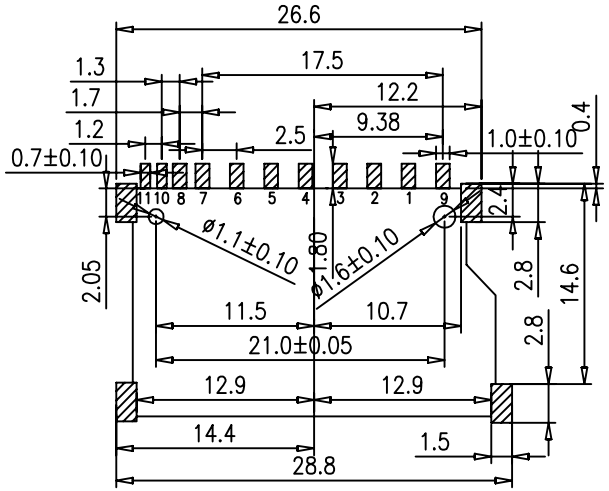

P.C.B Layout

SD CARD PIN DESIGN

Pin No.	Name	Description
1#	CD/DAT3	Card detect/Data I/O
2#	CMD	Command
3#	VSS1	Ground
4#	VDD	Power
5#	CLK	Clock
6#	VSS2	Ground
7#	DAT0	Data I/O
8#	DAT1	Data I/O
9#	DAT2	Data I/O

1.MATERIAL
1.1Housing:High Temperature Thermoplastic
1.2Contact:Copper Alloy
1.3Shell: Copper Alloy
2.PLATING
2.1Contact Area:Gold Plated Over Ni
2.2Solder Tail: Sn Plated Over Ni
Spec See Ordering Information
2.3Shell Solder Area:Plated Over Ni
3.SPECIFICATION
3.11Insertion force :9.80N MAX
3.2Extraction force:1.47N MIN
3.3Insulation resistance:1000MΩ
3.4Contact resistance:40mΩ MAX
3.5Dielectric Withstanding Voltage:500VAC
4.RATING
4.1Current Rating:0.5A
4.2Voltage Rating:200V
4.3Operating Temperature:−20°C~90°C

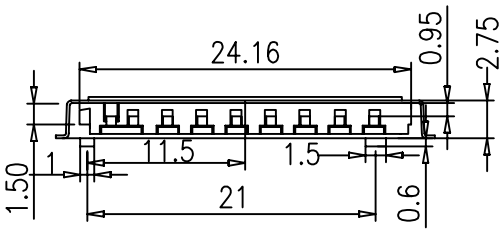

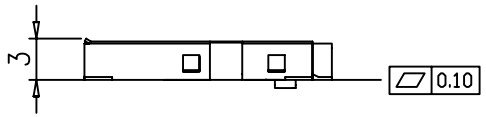

10−CARD DETECT PIN
11−WRITE PROTECT PIN
CROVND(SHELL)−COMMON PIN

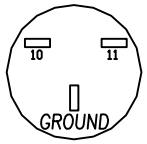

WITHOUT CARD

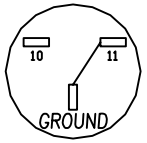

CARD INSERTED
WRITE PROTWCT:LOCK

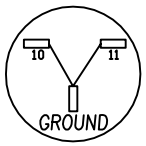

CARD INSERTED
WRITE PROTECT:UNLOCK

GENERAL TOLERANCE			
SELECT	✓		
TOL. / ON.	1	2	3
X.XXX	±0.15	±0.05	±0.15
X.XX	±0.20	±0.13	±0.25
X.X	±0.25	±0.25	±0.50
X.	±0.38	±0.38	±1.00
ANGLE	±1°		

UNITS mm
MAT'L
FINISH
Q'TY

NAME:	SD CARD		
PART NO:	SD04C−08300	TITLE:	SD CARD SHORT TYPE
APPD:	Vicky	DWG NO.	ATOM−A02150
CHKD:	Doris	SCALE	SHEET / REV
DR:	deng	1:1	1/1 / B