REV.	DATE	ECN NO.	MODIFICATION	APPROVER
A	2015/07/07	/	NEW	Vicky

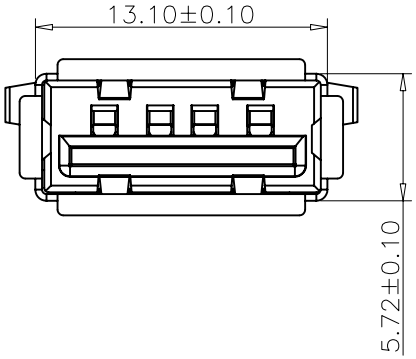

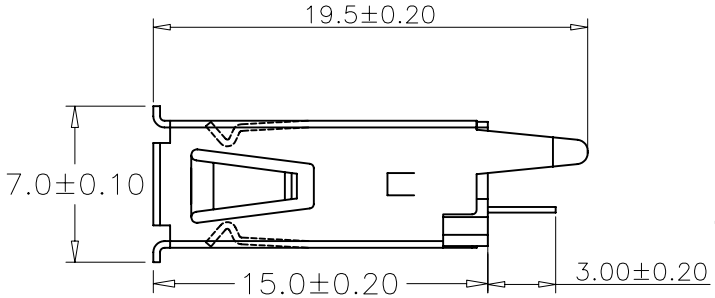

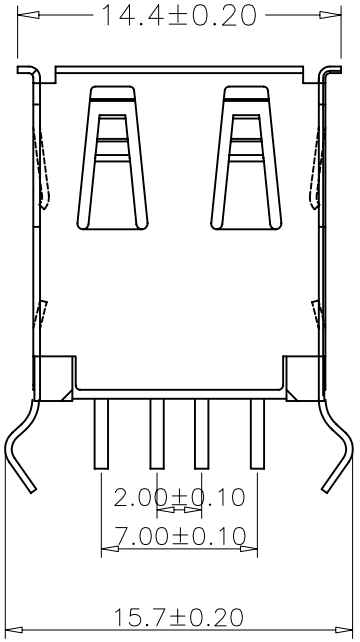

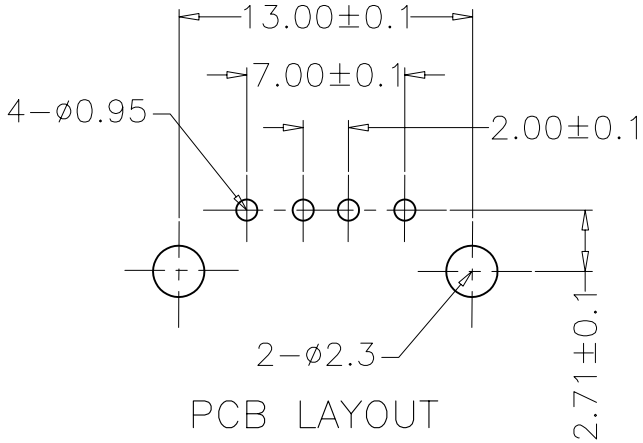

PCB LAYOUT

SPECIFICATIONS

1)Electrical:

1.1 Contact Resistance: 30 mΩ Max
1.2 Insulation Resistance: 1000MΩ Min
1.3 Withstanding Voltage: 500V DC
1.4 Current rating 1.5AMP Max.
1.5 Total Mating Force: 3.57kg Max.
1.6 Total Unmating force: 0.7kg Min.
1.7temperature Rage: -25° +75°

2)Material:

2.1 Housing: High temperature Plastics UL94V−0
2.2 SHELL: SPCC OR BRASS
2.3 Contact: Brass

3)Finishing:

3.1 plating: Au or Sn Over 100u" Ni
3.2 Crimp Terminal :Gold−plating
3.2 Shell:Nickel−plating

GENERAL TOLERANCE			
SELECT	✓		
TOL. ON:	1	2	3
X.XXX		±0.05	±0.15
X.XX	±0.20	±0.13	±0.25
X.X	±0.25	±0.25	±0.50
X.	±0.30	±0.38	±1.00
ANGLE	±2°		

UNITS mm
MAT'L
FINISH
Q'TY

NAME: USB

PART NO: USB304FA−B1005***

TITLE: USB A/F 4P DIP 180° 外壳弯脚 L=15.0

APPD: Vicky

DWG NO. ATOM−A03176

CHKD: Doris

DR: Jillian

SCALE	SHEET	REV
1:1	1/1	A