REV.	DATE	ECN NO.	MODIFICATION	APPROVER
A	2014/07/07	/	NEW	Vicky

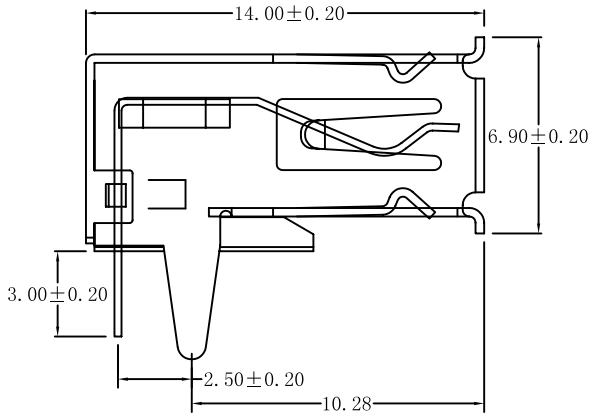

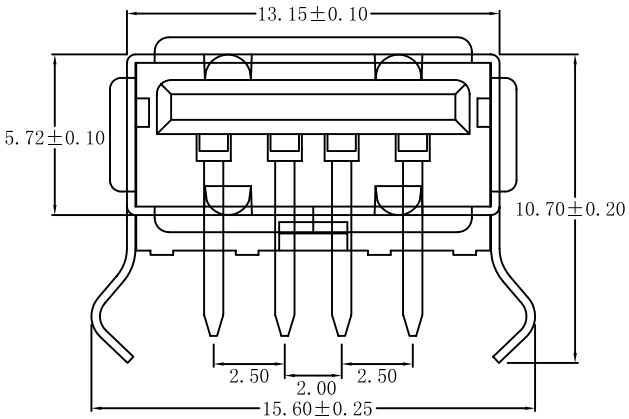

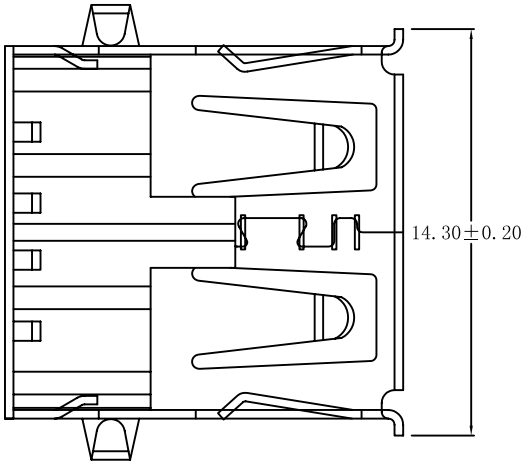

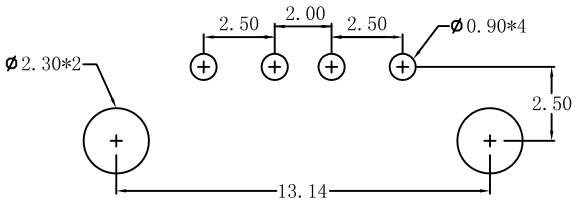

PCB LAYOUT

Specifications:

Electrical:

1. Current Rating
   1.5A/contact terminal
2. Voltage Rating 30V DC
3. Contact Resistance 30 milliohms MAX
4. Dielectnic Withstanding Voitage:
   500 V AC AT Sea Levol
5. Lnsulation Resistance:
   1000MEGA ohms MIN

Mechanical:

1. Cnnector Mate and Unmate Force
   Mate force:3.75kgf(MAX)
   Unmate force:1.02kgf(MIN)
2. Terminal Retenion:1.2kgf(MIN)

Matorial:

1. Housing:
   Hing Temperature Tnermaplastics,
   Ul 94V-0 PBT White/Black
2. Contact:Copper Alloy C2680
3. Shell: Copper Alloy C2680/SPCC

Finish:

1. Contact: Piated Gold in Mating Area;
   Tin On Solder Tails
2. Shell: Nickel Plating

GENERAL TOLERANCE			
SELECT	✓		
TOL. / ON.	1	2	3
X.XXX	±0.10	±0.05	±0.15
X.XX	±0.20	±0.13	±0.25
X.X	±0.30	±0.25	±0.50
X.		±0.38	±1.00
ANGLE	±2°		

UNITS mm

MAT'L

FINISH

Q'TY

NAME: USB

PART NO: USB304FA-A1005***

TITLE: USB A/F 4P DIP 90°内扣式 弯脚

APPD: Vicky

DWG NO. ATOM-A03087

CHKD: Doris

DR: Jillian

SCALE	SHEET	REV
1:1	1/1	A