REV.	DATE	ECN NO.	MODIFICATION	APPROVER
A	2011/06/18	/	NEW	Vicky

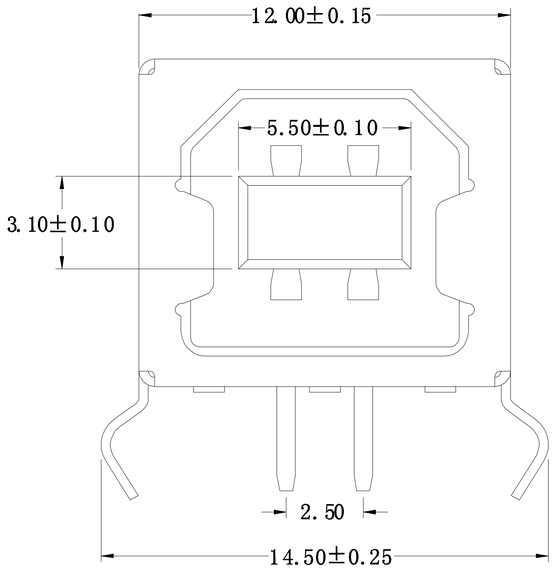

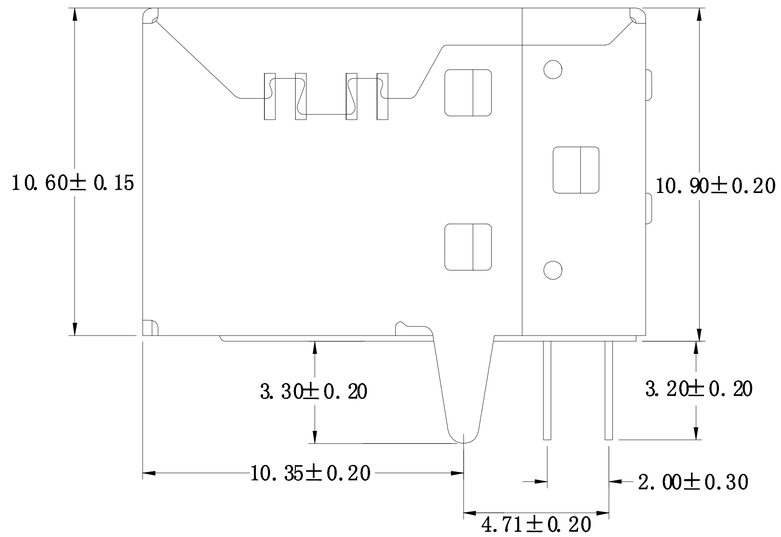

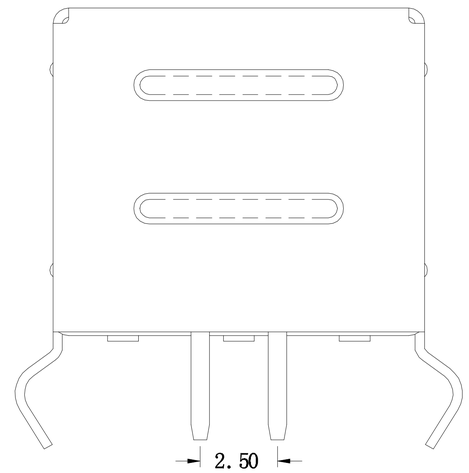

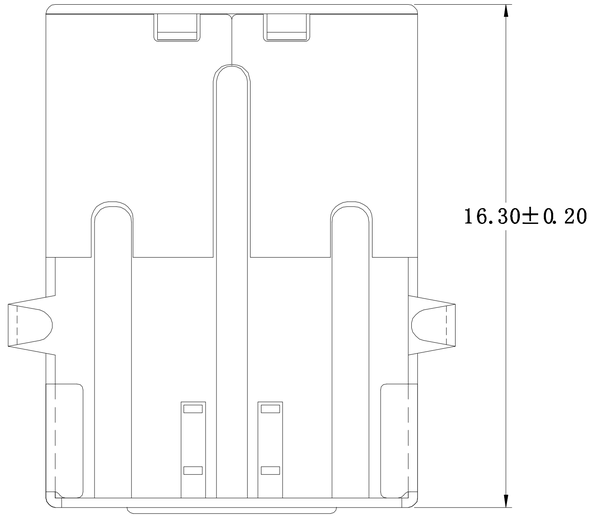

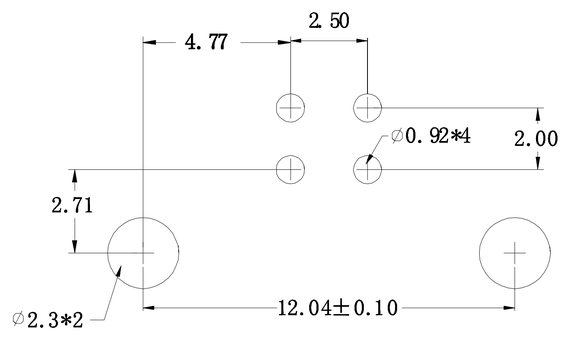

PCB LAYOUT

SPECIFICATIONS

Electrical:

1. Current Rating: 1.5A/contact terminal
2. Voltage Rating: 30V DC
3. Contact Resistance: 30 milliohms MAX
4. Dielectric Withstanding Voltage:
   500V AC AT Sea Level
5. Insulation Resistance:
   1000MEGA ohms MIN

Mechanical:

1. Connector Mate and Unmate force:
   Mate force: 3.75kgf (MAX)
   Unmate force: 1.02kgf (MIN)
2. Terminal Retention: 1.2kgf (MIN)

Material:

1. Housing: High temperature thermoplastics,
   UL 94V-0 PBT, White
2. Contact: Copper Alloy C2680
3. Shell: Copper Alloy C2680/SPCC

Finish:

1. Contact: Plated Gold in Mating Area;
   Tin On Solder Tails
2. Shell: Nickel Plating

GENERAL TOLERANCE			
SELECT	✓		
TOL. / ON.	1	2	3
X.XXX	±0.10	±0.05	±0.15
X.XX	±0.20	±0.13	±0.25
X.X	±0.30	±0.25	±0.50
X.		±0.38	±1.00
ANGLE	±5°		

UNITS mm

MAT'L

FINISH

Q'TY

NAME: USB

PART NO: USB304FB-A1005***

TITLE: USB B/F 4P DIP 90°

APPD: Vicky

DWG NO. ATOM-A03187

CHKD: Doris

DR: Cmy

SCALE	SHEET	REV
1:1	1/1	A